Plan Care
34906010306 Angle bar 90°

PRODUCT

DRAWING

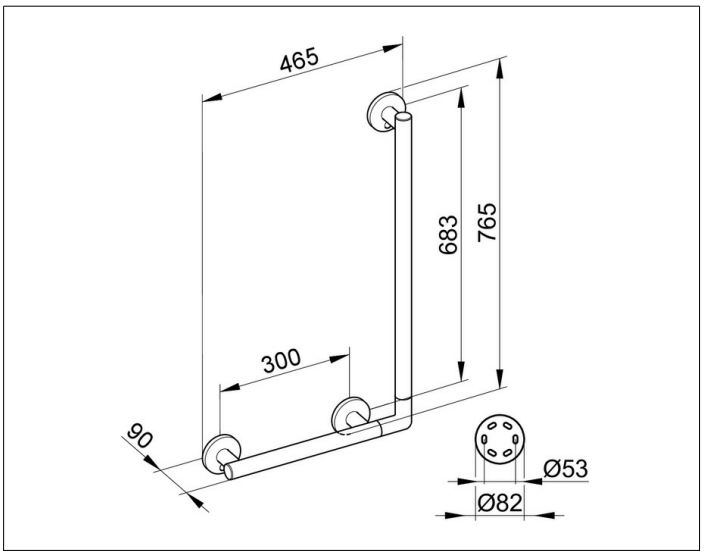

PRODUCT ATTRIBUTES

may be used on the left or right

SURFACE

chrome-plated

DIMENSION

465/765 mm

SPECIFICATIONS

KEUCO PLAN CARE angle bar 90° 34906010306
May be used on the left or right
High shine chrome-plated
in esthetic, practical and ergonomic Design,
vertical rail right hand side especially for WC-place as Support help,
Getting up and down up to 115 kg load capacity,
anti-static,
easy to clean
Outside measurement 300 / 600 mm
Pipe Diameter 33 mm,
3 Rosettes Diameter 82 mm
horizontal Base measurement 300 mm,
with a Total Width from 465 mm
vertical Base measurement 682 mm,
with a Total Height of 765 mm
Projection 90 mm,
Wall distance 57 mm
May be combined with toilet paper holder (Art, no. 34962)

Included in delivery:
3 x mounting set1 (Art, no. 34990000100)

Further mounting sets
3 x mounting set1 (Art, no. 34990000100)

Further mounting sets
(depending on type of wall):
3 x mounting set 4 (Art, no. 34990 000200), or
3 x mounting set 7 (Art, no. 34993 000200)
Please order additionally!